NEW JERSEY SPORTS & EXPOSITION AUTHORITY
ENGINEERING ROOF REPLACEMENT

FOR
NEW JERSEY SPORTS & EXPOSITION AUTHORITY

SJM

SJM ARCHITECTURE, LLC

954 KINDERKAMACK ROAD
RIVER EDGE, NJ, 07661
551.427.1487

ACOUS.	Acoustical
A.D.	Area Drain
ADJ.	Adjustable
A.F.F.	Above Finished Floor
AGGR.	Aggregate
AL.	Aluminum
APPROX.	Approximate
ARCH.	Architectural
ASPH.	Asphalt
AC.T.	Acoustical Tile
B.C.	Bottom of Curb
BD.	Board
BIT.	Bituminous
BLDG.	Building
BLK.	Block
BLKG.	Blocking
BM.	Beam
BOT.	Bottom
CAB.	Cabinet
C.B.	Catch Basin
C.G.	Corner Guard
CEM.	Cement
C.T.	Ceramic Tile
C.I.	Cast Iron
C.J.	Control Joint
CL.	Center Line
CLG.	Ceiling
CLKG.	Caulking
CLO.	Closet
CLR.	Clear
C.M.T.	Ceramic Mosaic Tile
C.M.U.	Concrete Masonry Unit
COL.	Column
CONC.	Concrete
CONN.	Connection
CONST.	Construction
CONT.	Continuous
CORR.	Corridor
CTSK.	Countersunk
CNTR.	Counter
CTR.	Center
CSW	Cavity Shaft Wall
CONC.PTD.	Concrete Painted
CPT.	Carpet
DBL.	Double
DEPT.	Department
D.F.	Drinking Fountain
DET.	Detail
DIA.	Diameter
DIM.	Dimension
DISP.	Dispenser
DN.	Down
DR.	Door
DS.	Downspout
D.S.P.	Dry Standpipe
DWR.	Drawer
DWG.	Drawing
EMR.	Elevator Machine Room
E.	East
EA.	Each
E.J.	Expansion Joint
EL.	Elevation
ELEC.	Electrical
ELEV.	Elevator
EMER.	Emergency
ENCL.	Enclosure
E.P.	Electrical Panelboard
EQ.	Equal
EQPT.	Equiptment
E.W.C.	Electric Water Cooler
EXIST.	Existing
EXPO.	Exposed
EXP.	Expansion
EXT.	Exterior
EIFS.	Exterior Insulated Finish System
EXP.CONST.	Exposed Construction
F.A.	Fire Alarm
F.B.	Flat Bar
F.D.	Floor Drain
FDN.	Foundation
F.E.	Fire Extinguisher
F.E.C.	Fire Extinguisher Cabinet
F.H.C.	Fire Hose Cabinet
FIN.	Finish
FLR.	Floor
FLASH.	Flashing
FLUOR.	Flourescent
F.O.C.	Face of Concrete
F.O.F.	Face of Finish
F.O.S.	Face of Studs
FPFG.	Fireproofing
F.P.S.C.	Fireproof Self Closing
F.S.	Full Size
FT.	Foot or Feet
FTG.	Footing
FURR.	Furring
FUT.	Future
GA.	Gage
GALV.	Galvanized
G.B.	Grab Bar
GL.	Glass
GND.	Ground
GR.	Grade
GYP.	Gypsum
G.W.B.	Gypsum Wallboard
G.W.T.	Glazed Wall Tile
H.B.	Hose Bibb
H.C.	Hollow Core
HDWD.	Hardwood
HDWE.	Hardware
H.M.	Hollow Metal
HORIZ.	Horizontal
H.P.	High Point
HR.	Hour
HGT.	Height
I.D.	Inside Diameter
IMP	Insulated Metal Panel
INSUL.	Insulation
INT.	Interior
JAN.	Janitor
JT.	Joint
KIT.	Kitchen
LAB.	Laboratory
LAM.	Laminate
LAV.	Lavatory
LKR.	Locker
L.P.	Low Point
LT.	Light
MAS.	Masonry
MAX.	Maximum
M.C.	Medicine Cabinet
MECH.	Mechanical
MEMB.	Membrane
MET.	Metal
MFR.	Manufacturer
MH.	Manhole
MIN.	Minimum
MIR.	Mirror
MISC.	Miscellaneous
MPC	Multi-wall Polycarbonate
M.O.	Masonry Opening
MTL	Material
MTD.	Mounted
MUL.	Mullion
N.T.S.	Not to Scale
O.A.	Overall
OBS.	Obscure
O.C.	On Center
O.D.	Outside Diameter
OFF.	Office
OPNG.	Opening
OPP.	Opposite
P.C.	Pre-cast Concrete
PL.	Plate
P.LAM.	Plastic Laminate
PLAS.	Plaster
PLYWD.	Plywood
PR.	Pair
PT.	Point
P.T.D.	Paper Towel Dispenser
PTN.	Partition
P.T.R.	Paper Towel Receptacle
Q.T.	Quarry Tile
R.	Riser
RAD.	Radius
R.D.	Roof Drain
REF.	Reference
REFR.	Refrigerator
RGTR.	Register
REINF.	Reinforced
REQD.	Required
RESIL.	Resilient
REV.	Revision
R.F.#	Roof Fan #
R.H.	Roof Hatch
RM.	Room
R.O.	Rough Opening
R.O.B.	Run of Bank
R.O.W.	Right of Way
RWD.	Redwood
R.W.L.	Rain Water Leader
S.	South
S.C.	Solid Core
S.C.D.	Seat Cover Dispenser
SCHED.	Schedule
S.D.	Soap Dispenser
SECT.	Section
SH.	Shelf
SHR.	Shower
SHT.	Sheet
SIM.	Similar
SPEC.	Specification
SQ.	Square
S.S.	Stainless Steel
S.SK.	Service Sink
STA.	Station
S.T.C.	Sound Transmission Class
STD.	Standard
STL.	Steel
STOR.	Storage
STRUCT.	Structural
SUSP.	Suspended
SYM.	Symmetrical
T.	Tread
TB	Tack Board
T.B.	Towel Bar
T.O.C.	Top of Curb
TEL.	Telephone
TEMP.	Tempered
TER.	Terrazzo
T.& G.	Tongue and Groove
THK.	Thick
T.P.	Top of Pavement
T.P.D.	Toilet Paper Dispenser
T.V.	Television
T.O.W.	Top of Wall
TYP.	Typical
UNF.	Unfinished
U.O.N.	Unless Otherwise Noted
UR.	Urinal
VERT.	Vertical
VEST.	Vestibule
V.C.T.	Vinyl Composition Tile
V.W.C.	Vinyl Wall Covering
W.	West
W/	With
WB	White Board
W.C.	Water Closet
WD.	Wood
W/O	Without
WP.	Waterproof
W.R.	Water Resistant
WSCT.	Wainscot
WT.	Weight
W.G.	Wire Glass

5 ABBREVIATIONS
SCALE: N.T.S.

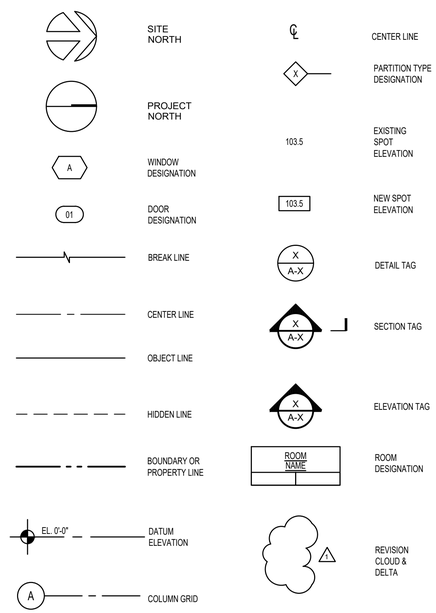

1 GRAPHIC SYMBOLS
SCALE: N.T.S.

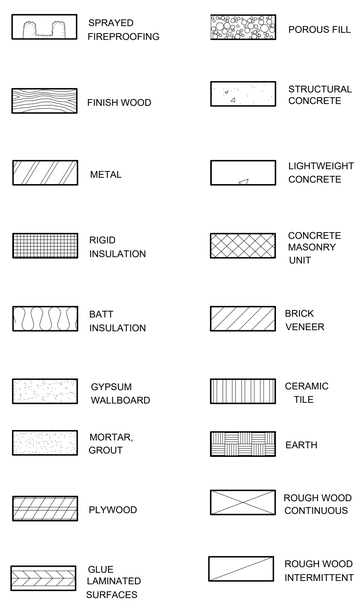

6 LEGEND
SCALE: N.T.S.

NOTE
THESE DRAWINGS ILLUSTRATE WORK CONFORMING WITH UNIFORM CONSTRUCTION CODE NEW JERSEY (UCCNJ), 5:23-6.3 DEFINITIONS, ALTERATIONS.

WORK SHALL COMPLY WITH UCCNJ, 5.23-6.6 ALTERATIONS

APPLICABLE CODES
2018 INTERNATIONAL BUILDING CODE - NJ EDITION, W/ NJAC 5:23-3.14 AMENDMENTS
2017 NATIONAL ELECTRICAL CODE, W/ NJAC 5:23-3.16 AMENDMENTS
2018 NATIONAL STANDARD PLUMBING CODE, W/ NJAC 5:23-3.15 AMENDMENTS
2016 ASHRAE 90.1 (COMMERCIAL), W/ NJAC 5:23-3.18 AMENDMENTS
2018 INTERNATIONAL MECHANICAL CODE, W/ NJAC 5:23-3.20 AMENDMENTS
2018 INTERNATIONAL FUEL GAS CODE, W/ NJAC 5:23-3.22 AMENDMENTS
2009 ICC/ANSI A117.1, W/ NJAC 5:23-7 AMENDMENTS
REHABILITATION SUBCODE, NJAC 5:23-6

AREA OF WORK:
+/- 4,130 SF

USE GROUP:
NO CHANGE

OCCUPANT LOAD:
NO CHANGE

2 CODE INFORMATION
SCALE: NO SCALE

ARCHITECTURAL:

A000 TITLE SHEET
A100 ROOF PLANS
A200 ROOF DETAILS
A201 ROOF DETAILS

7 DRAWING INDEX
SCALE: N.T.S.

PROJECT LOCATION
50 STATE ROUTE 120
EAST RUTHERFORD, NJ
07073

NORTH

3 LOCATION PLAN
SCALE: N.T.S.

NJS&EA
50 STATE ROUTE 120
EAST RUTHERFORD, NJ
07073

NORTH

4 VICINITY PLAN
SCALE: N.T.S.

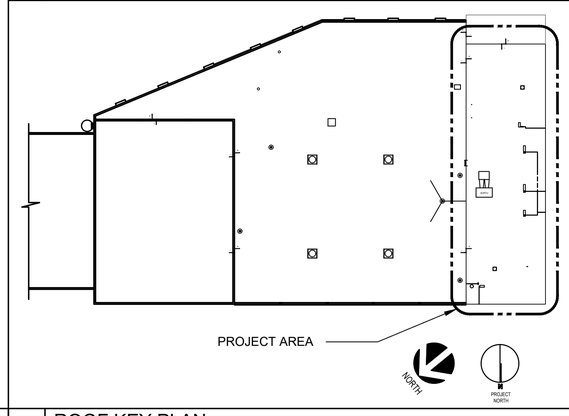

8 ROOF KEY PLAN
SCALE: 1/32" = 1'-0"

STEPHEN J. MARTINEZ
NJ AI 20890

No	Description	Date
	FOR BID	9/23/2022

Project Number	2022.SM.004
Issue Date	9/23/2022
Drawn By	
Scale	AS NOTED
Drawing Title	TITLE SHEET
Drawing Number	A000

PLAN LEGEND

	EXISTING ROOFING SYSTEM TO BE REMOVED
	EXISTING TO REMAIN
N.I.C.	DENOTES "AREA OF NO WORK" (UNLESS OTHERWISE NOTED)
#	KEYED DEMOLITION NOTATIONS
	EXISTING TO REMOVED
+ -	CHANGED IN ELEVATION
(E)EX	EXISTING EXHAUST FAN
⊗ (E)RD	EXISTING ROOF DRAIN
(E)CU	EXISTING CONDENSING UNIT
(E)V	EXISTING VENT
(E)PP	EXISTING PIPE PORTAL
(E)ED	EXISTING ELECTRICAL DISCONNECT
(E)SC	EXISTING SCUPPER
HP	HIGH POINT
	EXISTING CONDUIT

DEMOLITION KEY NOTES:

1. EXISTING ROOF SYSTEM TO BE REMOVED IN ITS ENTIRETY DOWN TO DECK.
2. EXISTING PLUMBING VENTS TO REMAIN.
3. REMOVE AND SALVAGE EXISTING EXHAUST FANS FOR REINSTALLATION. EXISTING CURB AND FLASHING TO BE REMOVED IN THEIR ENTIRETY.
4. REMOVE AND SALVAGE EXISTING CONDENSING UNIT, REFRIGERANT LINES, CONDUIT, AND ELECTRICAL DISCONNECT.
5. EXISTING PIPE PORTAL TO BE REMOVED AND PREPARED TO BE REPLACED.
6. EXISTING SCUPPER, AND DOWNSPOUT TO BE REMOVED IN THEIR ENTIRETY.
7. EXISTING CAPPED EXHAUST DUCTS TO BE REMOVED AND DECK FILLED IN SO LEVEL WITH ADJACENT SURFACES.
8. REMOVE COUNTER FLASHING AND SEALANT AROUND THE PERIMETER WHERE EXPOSED, IN THEIR ENTIRETY. PREP WALL FOR LIQUID FLASHING ENTIRE HEIGHT.
9. EXISTING ROOF TOP UNIT ON DUNNAGE TO REMAIN. REMOVE AND REINSTALL AS NEEDED FOR ROOF DEMOLITION AND REPLACEMENT.
10. EXISTING LADDER TO REMAIN.
11. EXISTING GUTTER AND DOWNSPOUTS TO DEMOLISHED. PREP AREA FOR REPLACEMENTS.
12. EXISTING ROOF DRAIN TO BE REMOVED AND PREPARED FOR REPLACEMENT.
13. EXISTING 8' TALL DUCT VENT WITH BRACING CABLES. VENT TO REMAIN, BRACING CABLES TO SALVAGED FOR RE-INSTALLATION.

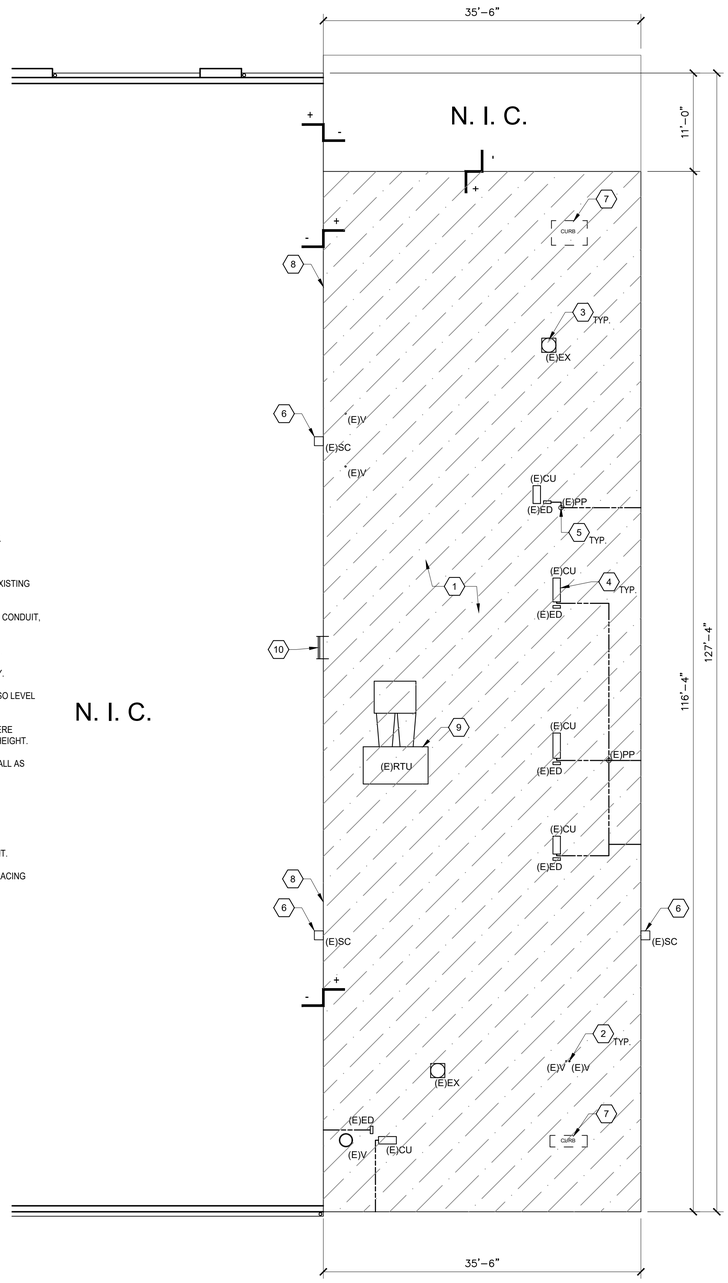

NOTE: ALL DIMENSIONS ARE APPROXIMATE AND TO BE FIELD VERIFIED PRIOR TO ORDERING OF MATERIALS / INSTALLATIONS.

1 ROOF DEMOLITION PLAN
SCALE: 1/8" = 1'-0"

PLAN LEGEND

	NEW SCHEDULED ROOFING SYSTEM, MINIMUM 1/4" PER 12" SLOPE
N.I.C.	DENOTES "AREA OF NO WORK" (UNLESS OTHERWISE NOTED)
#	KEYED CONSTRUCTION NOTATIONS
+ -	CHANGED IN ELEVATION
(E)EX	EXISTING EXHAUST FAN
⊗ (N)RD	NEW ROOF DRAIN
(E)CU	EXISTING CONDENSING UNIT
(E)V	EXISTING VENT
(N)PP	NEW PIPE PORTAL
(E)ED	EXISTING ELECTRICAL DISCONNECT
(N)SC	NEW SCUPPER
HP	HIGH POINT
	EXISTING CONDUIT

CONSTRUCTION KEY NOTES:

1. NEW SCHEDULED ROOFING SYSTEM. SEE PROJECT MANUAL AND TYPICAL ROOFING DETAILS ON A200.
2. EXISTING PLUMBING VENT TO REMAIN. SEE DETAIL 6 / A200FOR ADDITIONAL INFORMATION FOR LARGER DIAMETER PIPES PROVIDE "CHINESE HATS" AND DRAW BAND.
3. PROVIDE CRICKETS FOR WATER DIVERATION AS REQUIRED.
4. HYBRID FLASHING WITH SINGLE PLY MEBRANE, SEE DETAIL 1 / A201. NOTE THERE ARE EXISTING WINDOWS AND AN ACCESS DOOR THAT MUST BE WORKED AROUND, SEE EXHIBIT B "EXISTING SURVEY PHOTOS" FOR WALL PHOTOS, AND CHART ON THIS PAGE.
5. EXISTING EXHAUST TO BE REINSTALLED ON NEW CURB, SEE DETAIL 11/ A200 .
6. NEW SCHEDULED COUNTER FLASHING. SEE DETAIL 12 / A200 FOR ADDITIONAL INFORMATION.
7. SALVAGED EQUIPMENT TO BE REINSTALLED ON NEW EQUIPMENT RAIL, SEE RAIL DETAIL 5 / A200.
8. SALVAGED POWER AND DISCONNECTS TO BE RE-INSTALLED ON NEW EQUIPMENT RAIL, SEE DETAIL 5 / A200.
9. EXISTING REFRIGERANT AND CONDUIT TO BE REINSTALLED ON PIPE SUPPORTS, MIRO INDUSTRIES PILLOW BLOCK AND OR STRUT SUPPORTS OR APPROVED EQUAL AT 10'-0" O.C. MAX. SEE DETAIL 10 / A200 FOR PIPE PORTAL.
10. EXISTING LADDER TO BE SCRAPED, SANDED, AND PAINTED. LADDER PENETRATION SIMILAR TO DETAIL 8/ A200.
11. NEW METAL ROOF EDGE, SEE TYPICAL DETAIL 1 / A200.
12. NEW GUTTER, SEE DETAIL 2 / A200, AND 2 / A201.
13. NEW DOWNSPOUT TO ROOF BELOW, SEE DETAIL 3 / A201.
14. REINSTALL SALVAGED DUCT VENT CABLES. PROVIDE PITCH POCKETS AT CABLE ATTACHMENT LOCATIONS, SIMILAR TO DETAIL 10 / A200.
15. EXISTING DUCT VENT, SEE DETAIL 4 / A200.

WINDOW AND DOOR INFORMATION
WINDOW #1 - 8" ABOVE EXISTING ROOF BELOW
WINDOW #2 - 7" ABOVE EXISTING ROOF BELOW
WINDOW #3 - 12" ABOVE EXISTING ROOF BELOW
WINDOW #4 - 11.5" ABOVE EXISTING ROOF BELOW
DOOR #1 - 7" ABOVE EXISTING ROOF BELOW

SEE DETAILS 4 AND 5 ON SHEET A201

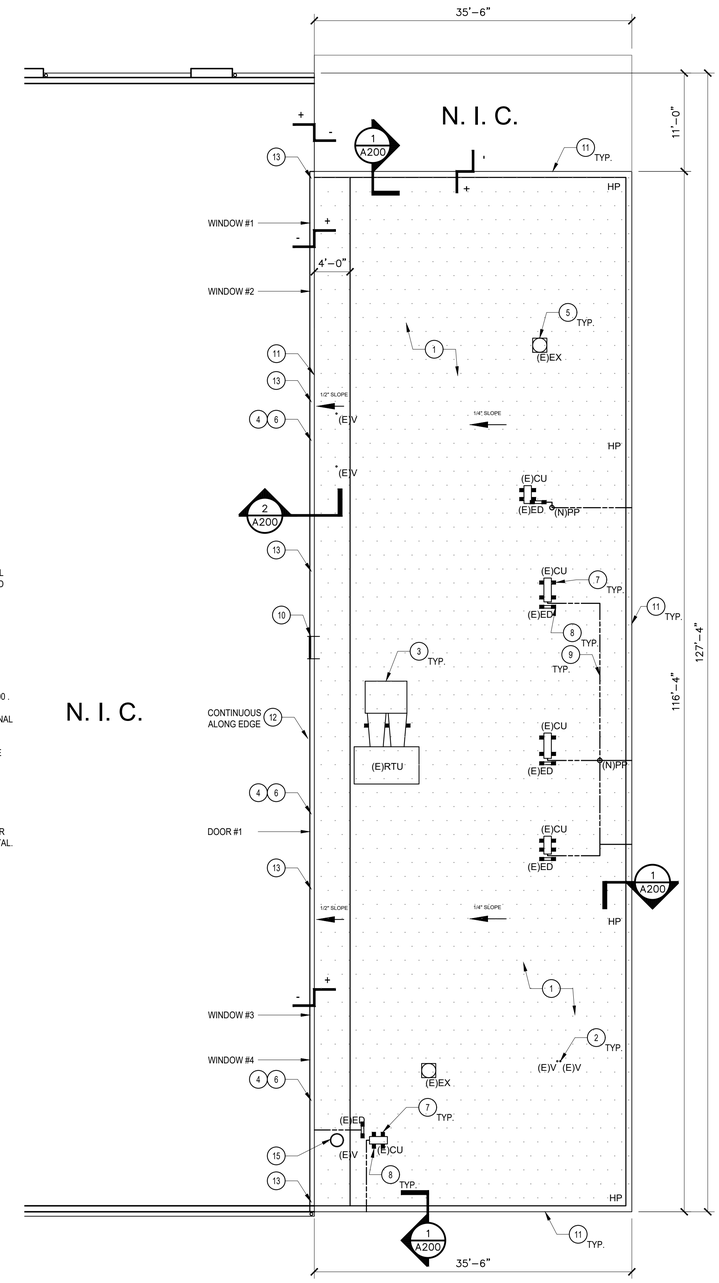

NOTE: ALL DIMENSIONS ARE APPROXIMATE AND TO BE FIELD VERIFIED PRIOR TO ORDERING OF MATERIALS / INSTALLATIONS.

2 ROOF REPLACEMENT PLAN
SCALE: 1/8" = 1'-0"

SJM

SJM ARCHITECTURE, LLC

954 KINDERKAMACK ROAD
RIVER EDGE, NJ, 07661
551.427.1487

STEPHEN J. MARTINEZ
NJ AI 20890

No	Description	Date
	FOR BID	9/23/2022

Project Number	2022.SM.004
Issue Date	9/23/2022
Drawn By	
Scale	AS NOTED
Drawing Title	

ROOF PLANS

Drawing Number

A100

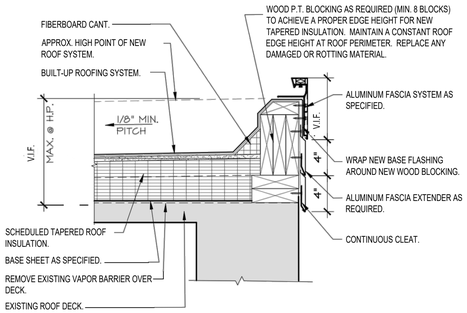

1 ROOF EDGE DETAIL
SCALE: N.T.S.

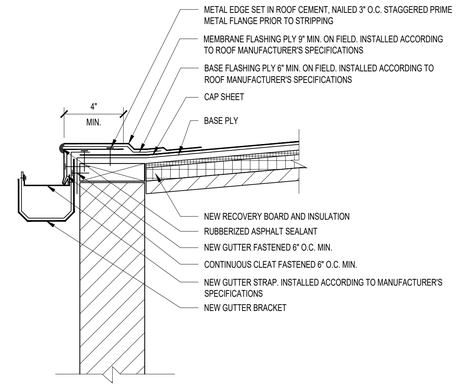

2 GUTTER DETAIL
SCALE: N.T.S.

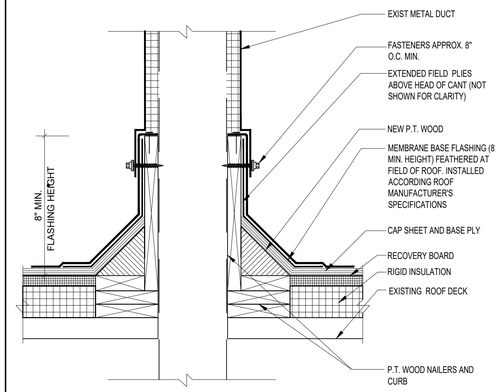

3 PENETRATION DETAIL
SCALE: N.T.S.

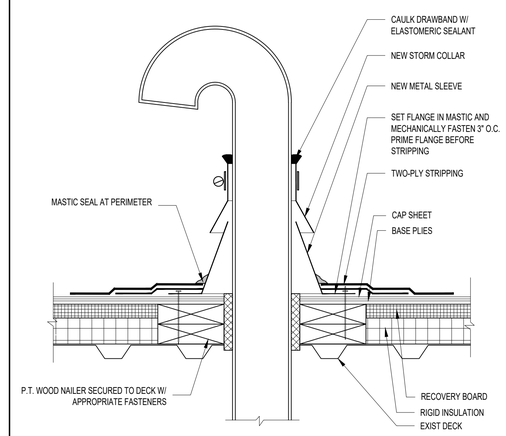

4 DUCT VENT DETAIL
SCALE: N.T.S.

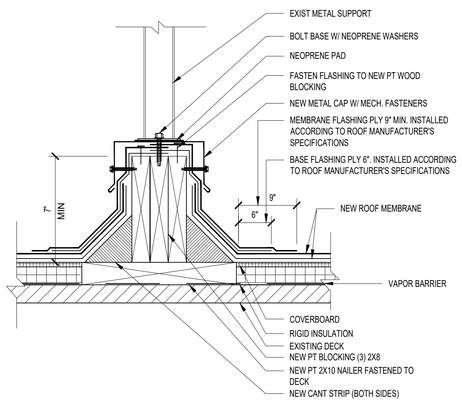

5 EQUIPMENT SUPPORT DETAIL
SCALE: N.T.S.

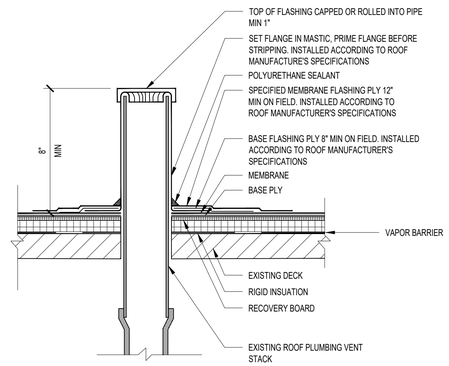

6 PLUMBING VENT DETAIL
SCALE: N.T.S.

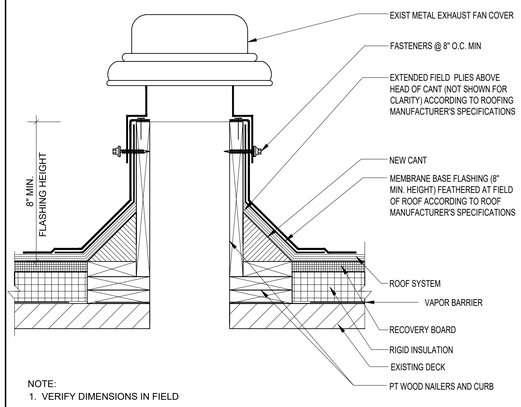

NOTE:
1. VERIFY DIMENSIONS IN FIELD

7 EXHAUST VENT CURB DETAIL
SCALE: N.T.S.

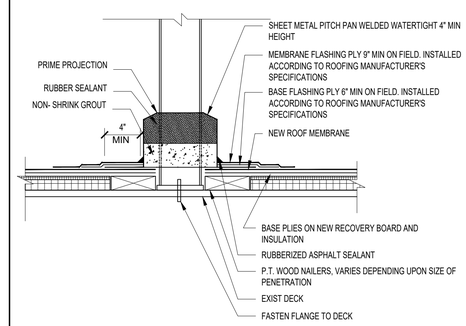

8 PITCH POCKET DETAIL
SCALE: N.T.S.

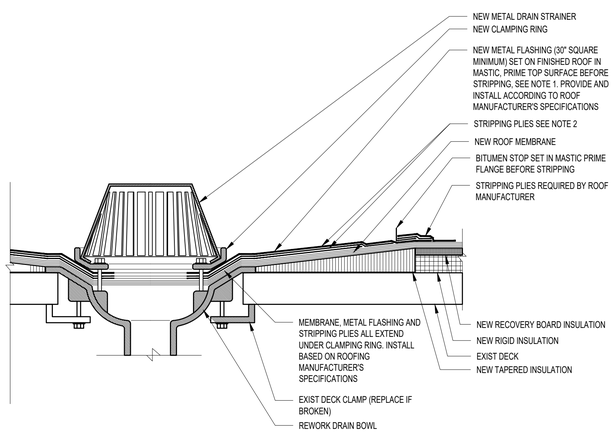

NOTES:
1. MINIMUM 30" SQUARE 2-1/2LB. TO 4LB. LEAD OR 16-OZ. SOFT COPPER FLASHING SET ON FINISHED ROOF FELTS IN ASPHALT MASTIC. PRIME TOP SURFACES BEFORE STRIPPING.
2. STRIPPING FELTS EXTEND 4" AND 6" BEYOND EDGE OF SHEET METAL STOP FLANGE
3. REMOVABLE AND REPLACEMENT OF FASTENERS IS PART OF BASE CONTRACT

9 ROOF DRAIN STRAINER DETAIL
SCALE: N.T.S.

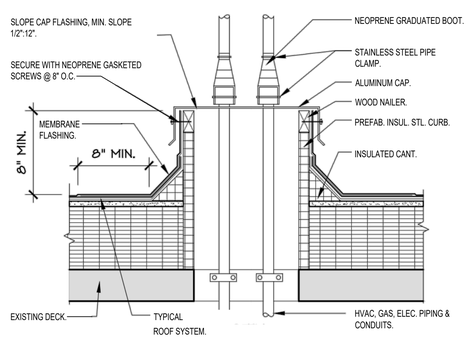

10 EPDM BOOT DETAIL
SCALE: N.T.S.

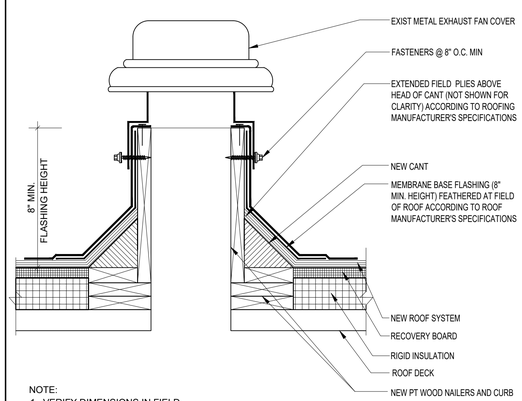

NOTE:
1. VERIFY DIMENSIONS IN FIELD

11 EXHAUST VENT CURB DETAIL
SCALE: N.T.S.

12 NOT USED
SCALE: NONE

SJM

SJM ARCHITECTURE, LLC
954 KINDERKAMACK ROAD
RIVER EDGE, NJ, 07661
551.427.1487

STEPHEN J. MARTINEZ
NJ AI 20890

No	Description	Date
	FOR BID	9/23/2022

Project Number	2022.SM.004
Issue Date	9/23/2022
Drawn By	
Scale	AS NOTED
Drawing Title	

ROOF DETAILS

Drawing Number

A200

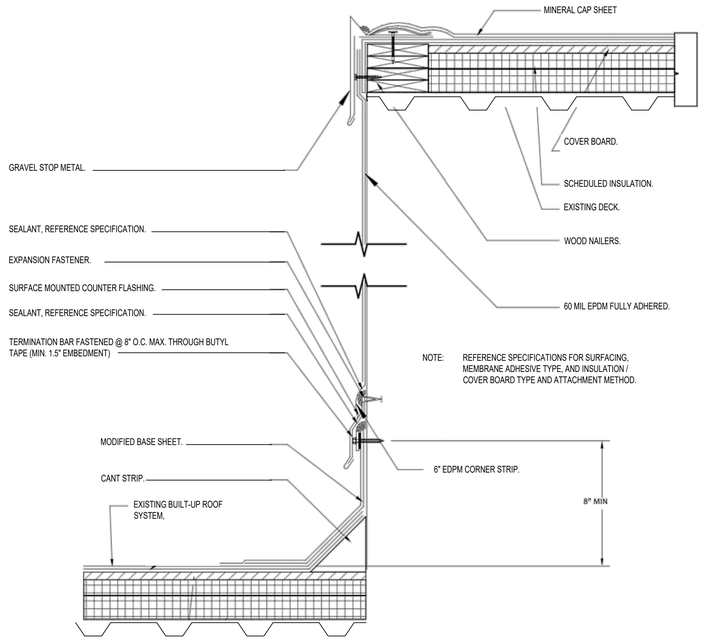

1 HYBRID FLASHING
SCALE: 1-1/2" = 1'-0"

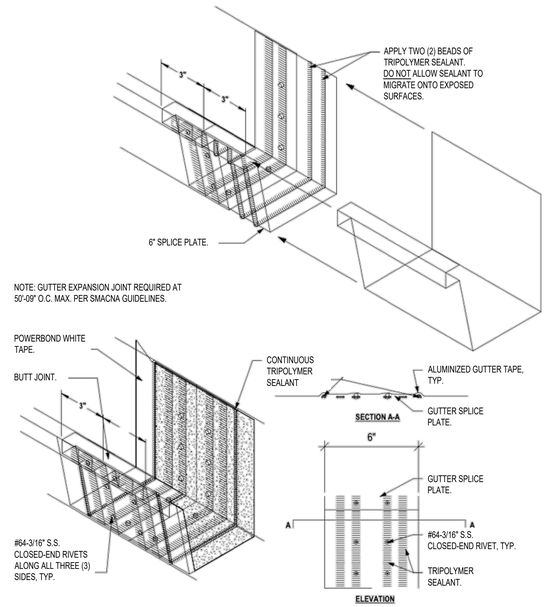

2 GUTTER ASSEMBLY DETAIL
SCALE: N.T.S.

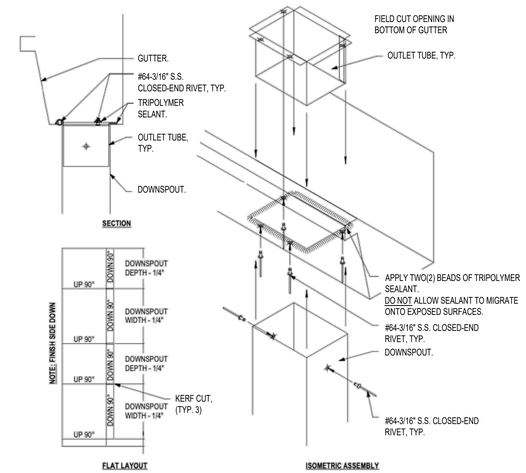

3 LEADER ASSEMBLY DETAIL
SCALE: N.T.S.

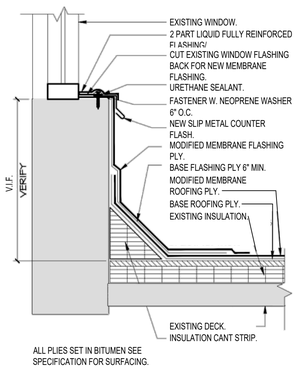

4 DOOR THRESHOLD DETAIL
SCALE: N.T.S.

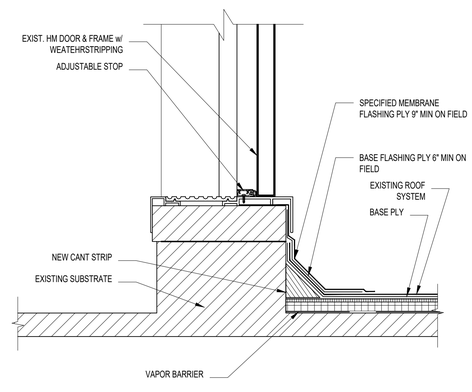

5 DOOR THRESHOLD DETAIL
SCALE: N.T.S.

6 NOT USED
SCALE: NONE

SJM

SJM ARCHITECTURE, LLC
954 KINDERKAMACK ROAD
RIVER EDGE, NJ, 07661
551.427.1487

STEPHEN J. MARTINEZ
NJ AI 20890

No	Description	Date
	FOR BID	9/23/2022

Project Number	2022.SM.004
Issue Date	9/23/2022
Drawn By	
Scale	AS NOTED

Drawing Title

ROOF DETAILS

Drawing Number

A201